Name: Fender Blender	Manufacturer / Designer: Fender	Revision: 11/18/95	Model #

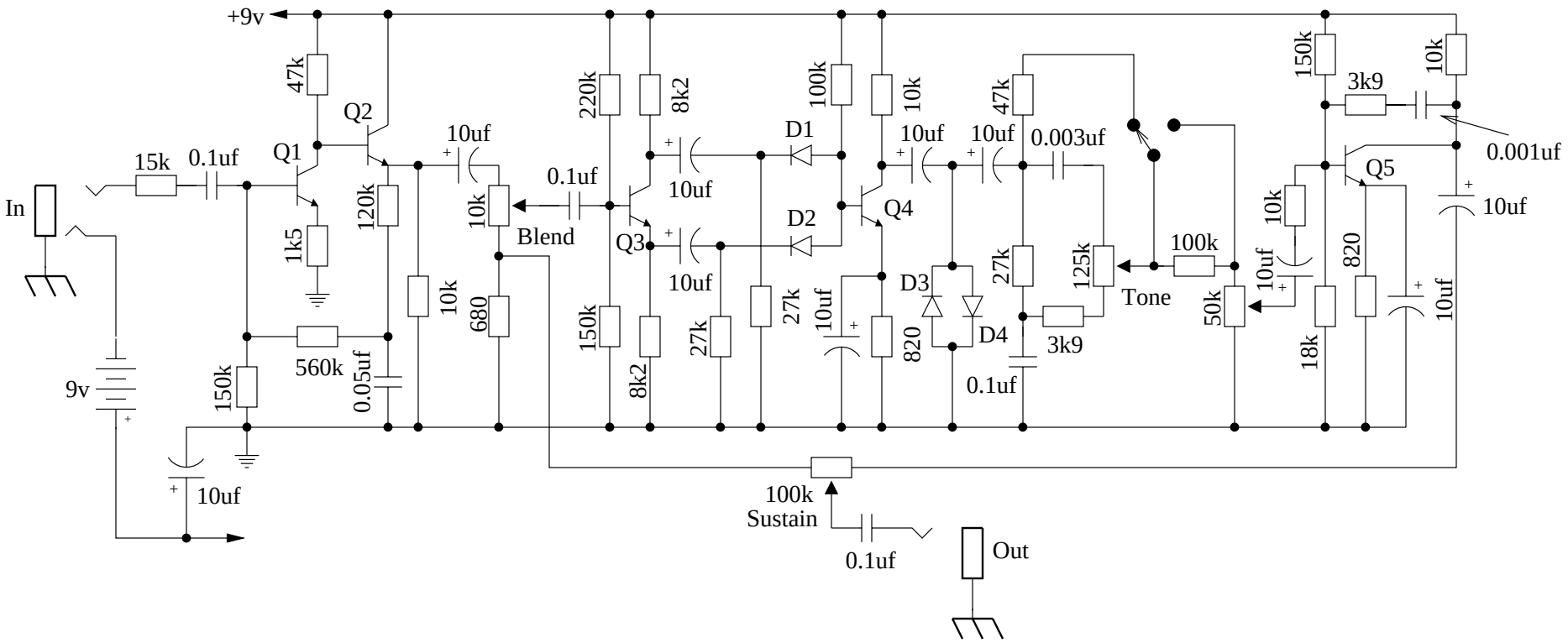

All resistors 5% (many of the orginals were actually 10%) 1/2W
All capacitors minimum 25V
Q1 & Q2 - 2N3391A
Q3 to Q5 - 2N3391
D1 to D4 - 1N276
Original switching scheme was a spdt, not true bypass. This effect would benefit from a true bypass mod.
The effect itself is a distortion with octaving.