UniVibe

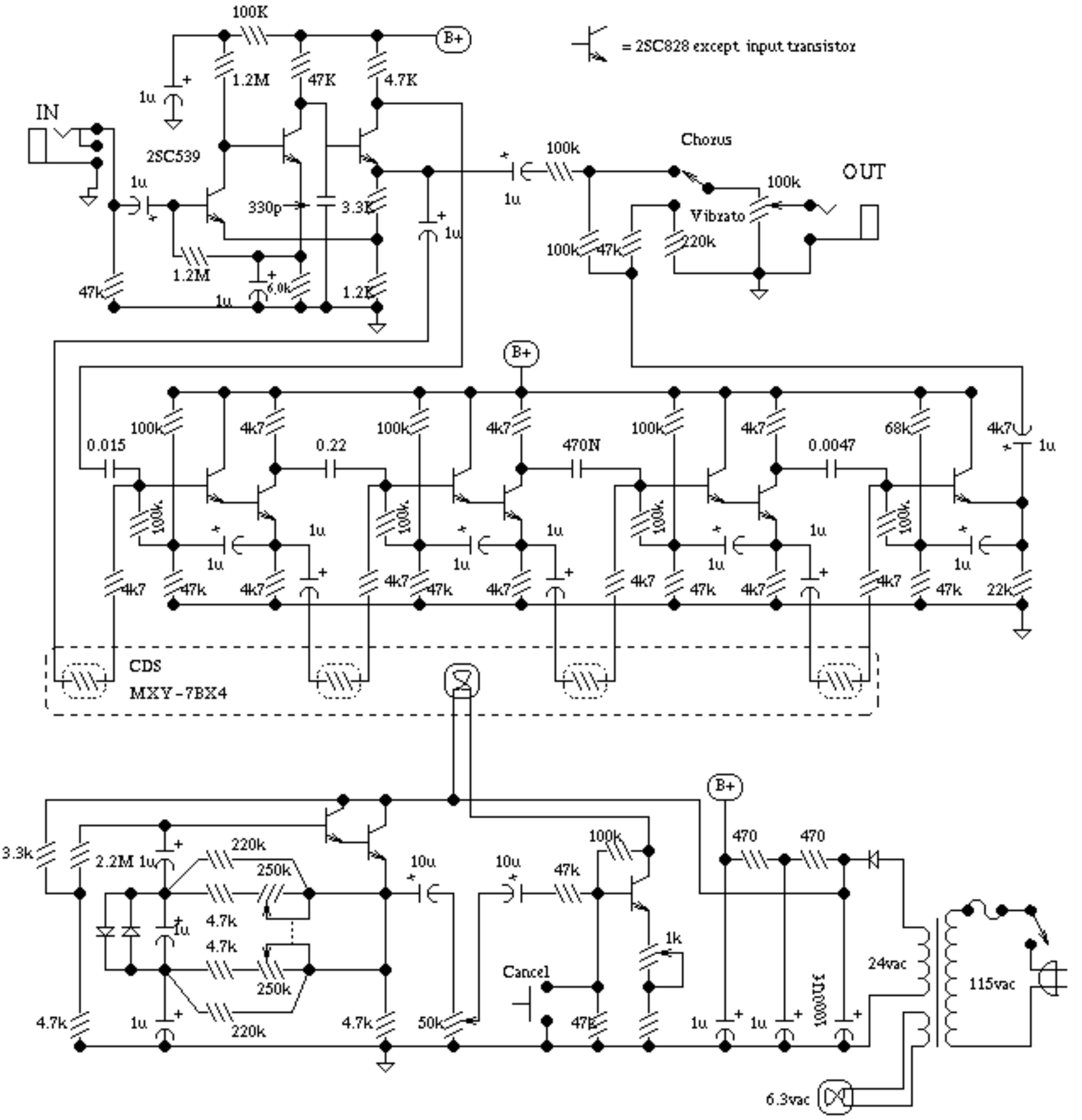

The UniVibe is famous from Jimi's use of it. This schematic is known to be incorrect, as the low frequency oscillator section will not work as shown. The LFO is probably a phase shift oscillator, with the dual 250K pots in the pedal assembly to control speed. A modern version would substitute an LED/photocell optocoupler for the four LDR's and the incandescent light bulb that makes the phase shifting work. This IS just a four stage phaser, perhaps with some distortion from the signal path thrown in.