Univox Super-Fuzz

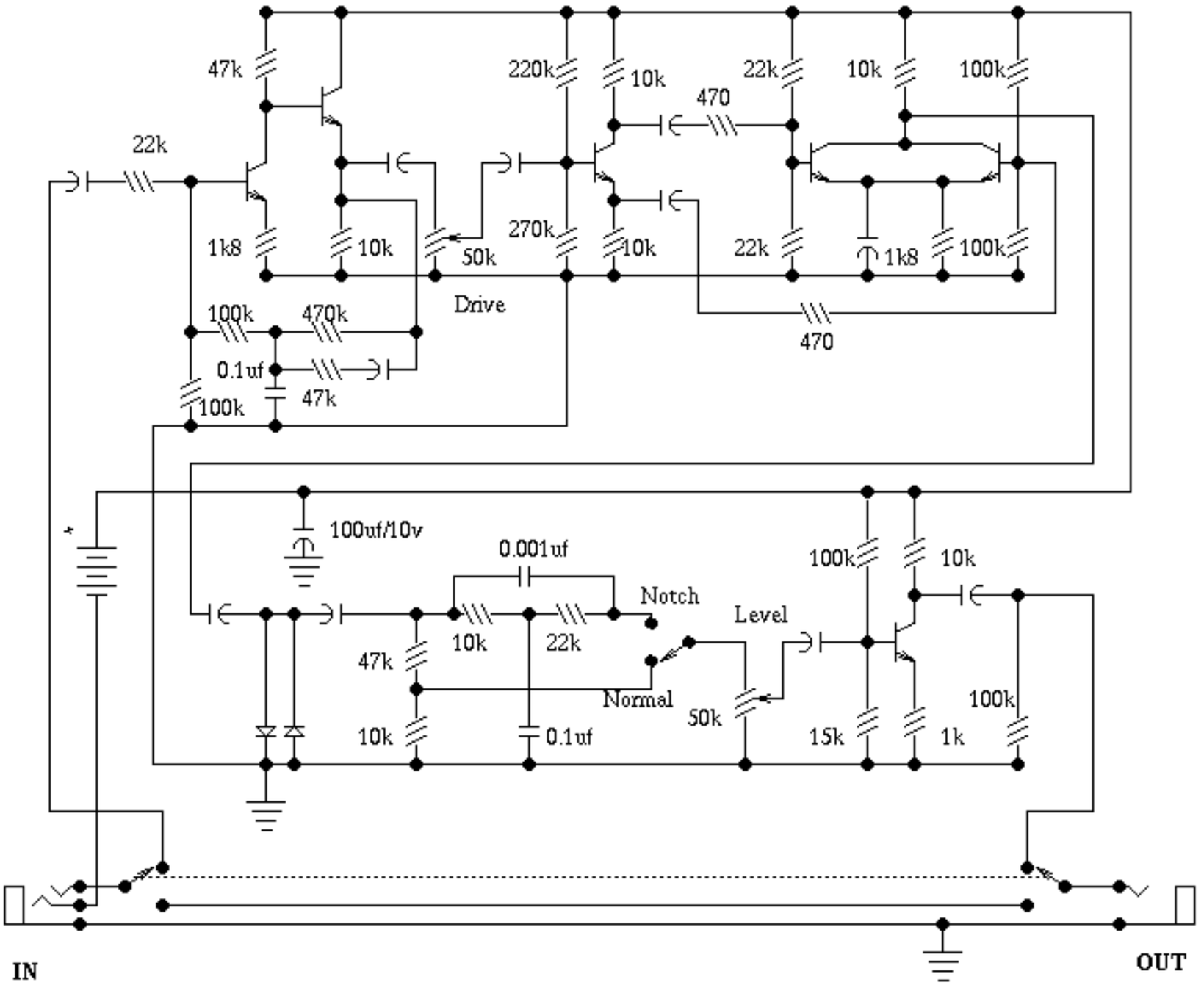

= high gain NPN; 2N2222, 2N3391

= 10 uF electrolytic cap, positive at straight bar

The Univox Super-Fuzz is a 69-to-early 70's design that includes two unique features. These are the octave generation effect from the differential-pair-with-collectors -tied-together and the choice of just a clipping amp or a 1kHz notch for different sounds. The odd-diffamp is actually a full wave rectifier as used here. The clipping is all done with the pair of back-to-back diodes just before the normal/notch filter section. These were originally germanium, although silicon works. You can use LED's here for a different sound, but you need a lot of gain in the input to get enough signal to them to break them over.