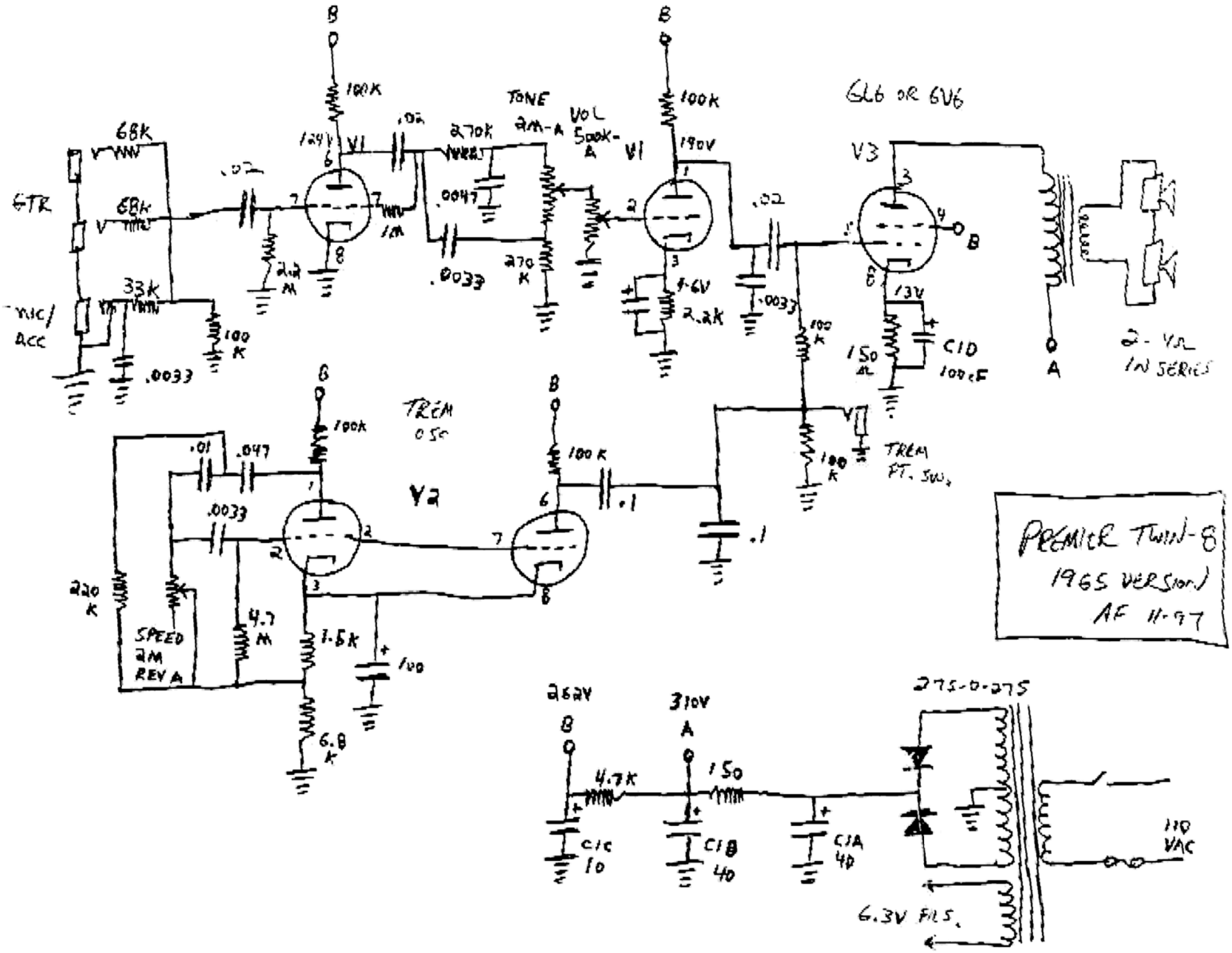

PREMIER TWIN-8
1965 VERSION
AF 11-97
GTR
MIC/ACC
68K
68K
33K
.0033
100 K
.02
2.2 M
100K
124V
V1
1M
.02
270K
.0047
.0033
270 K
TONE 2M-A
VOL 500K-A
V1
100K
190V
4.6V
2.2K
.02
.0033
100 K
GL6 OR 6V6
V3
13V
150 Ω
C1D 100cF
2-4Ω IN SERIES
TREM OSC
V2
100K
.01
.047
.0033
220 K
SPEED 2M REV A
4.7 M
1.5K
100
6.8 K
100 K
.1
.1
100 K
TREM FT. SW.
262V
310V
4.7K
150
C1C 10
C1B 40
C1A 40
275-0-275
110 VAC
6.3V FILS.