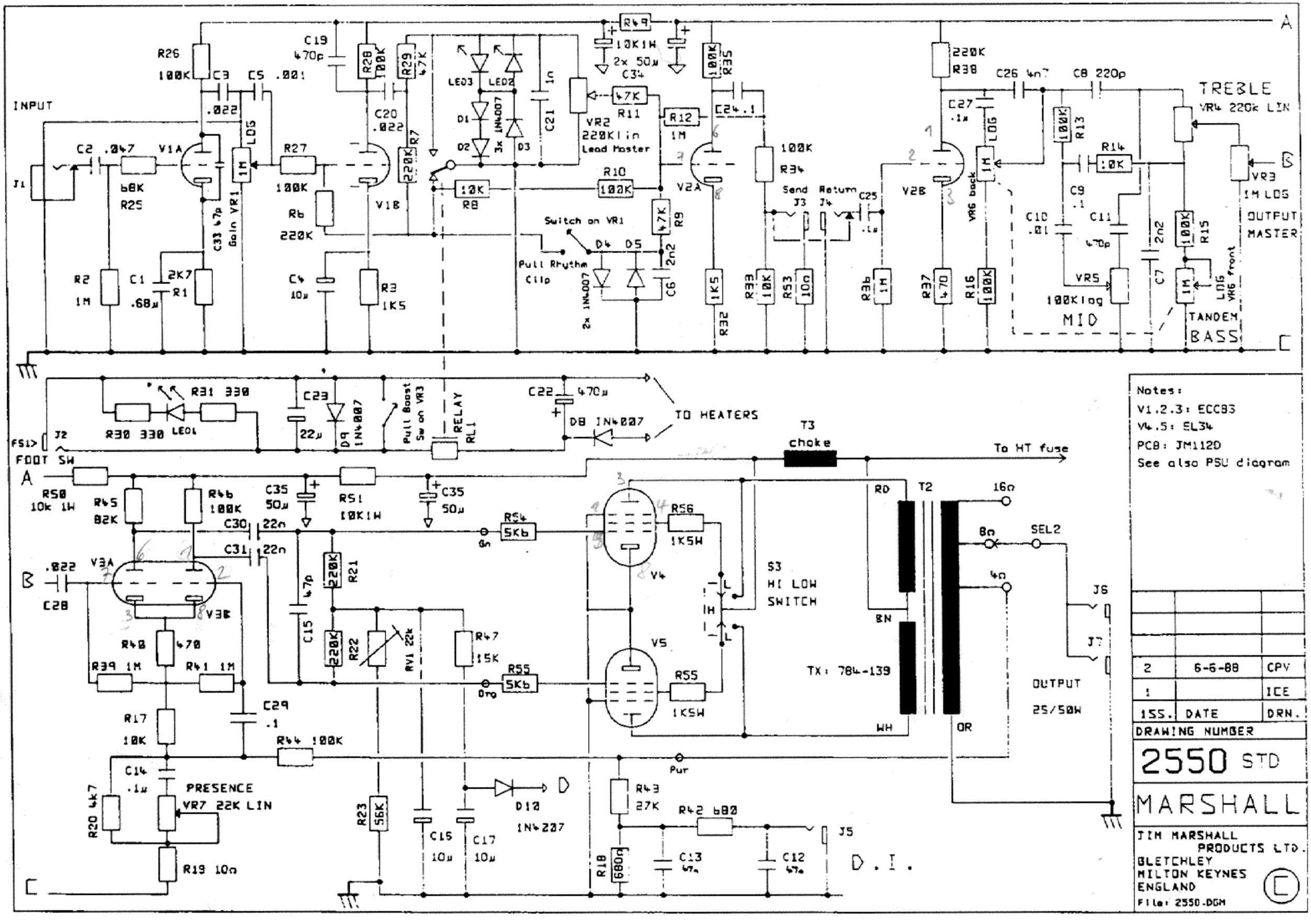
INPUT
J1
C2 .047
R25 68K
R2 1M
C1 .68µ
R1 2K7
C3 .022
R26 100K
C5 .001
C33 47p
Gain VR1
LOG
1M
R27 100K
R6 220K
C4 10µ
R3 1K5
C19 470p
R28 100K
R29 47K
C20 .022
R7 220K
V1A
V1B
LED3
LED2
D1
D2
D3
3x 1N4007
C21 1n
R8 10K
R49 10K1W
2x 50µ
C34
VR2 220K lin
Lead Master
47K
R11
R12 1M
R10 100K
Switch on VR1
Pull Rhythm Clip
D4
D5
2x 1N4007
C6 2n2
R9 47K
R35 100K
C24 .1
V2A
R32 1K5
R34 100K
Send J3
Return J4
C25 .1µ
R33 10K
R53 10Ω
R36 1M
V2B
R37 470
R16 100K
R38 220K
C27 .1µ
C26 4n7
C8 220p
R13 100K
R14 10K
C9 .1
C10 .01
C11 470p
VR5 100K log
MID
VR6 back
C7 2n2
R15 100K
TREBLE
VR4 220k LIN
VR3 1M LOG
OUTPUT MASTER
LOG VR6 front
TANDEM
BASS
A
B
C
R31 330
R30 330
LED1
C23 22µ
D9 1N4007
Pull Boost Sw on VR3
RELAY RL1
C22 470µ
D8 1N4007
TO HEATERS
FS1>
J2
FOOT SW
T3 choke
To HT fuse
R50 10k 1W
R45 82K
R46 100K
C35 50µ
R51 10K1W
C30 22n
C31 22n
R54 5Kb
Gn
R56 1K5W
V4
V5
R55 5Kb
Org
R55 1K5W
S3 HI LOW SWITCH
RD
T2
16Ω
8Ω
SEL2
4Ω
BN
WH
OR
TX: 784-139
OUTPUT 25/50W
J6
J7
.022
C28
V3A
V3B
R40 470
R39 1M
R41 1M
C15 47p
R21 220K
R22 220K
RV1 22k
R47 15K
C29 .1
R17 10K
R44 100K
C14 .1µ
PRESENCE
VR7 22K LIN
R20 4k7
R19 10Ω
R23 56K
C16 10µ
C17 10µ
D10 1N4207
D
Pur
R43 27K
R42 680
R18 680Ω
C13 47n
C12 47n
J5
D.I.
Notes:
V1.2.3: ECC83
V4.5: EL34
PCB: JM112D
See also PSU diagram
2 6-6-88 CPV
1 ICE
ISS. DATE DRN.
DRAWING NUMBER
2550 STD
MARSHALL
JIM MARSHALL PRODUCTS LTD.
BLETCHLEY
MILTON KEYNES
ENGLAND
File: 2550.DGM